LightCove

BRASS CONE SHADE WALL SCONCE

Antique Brass



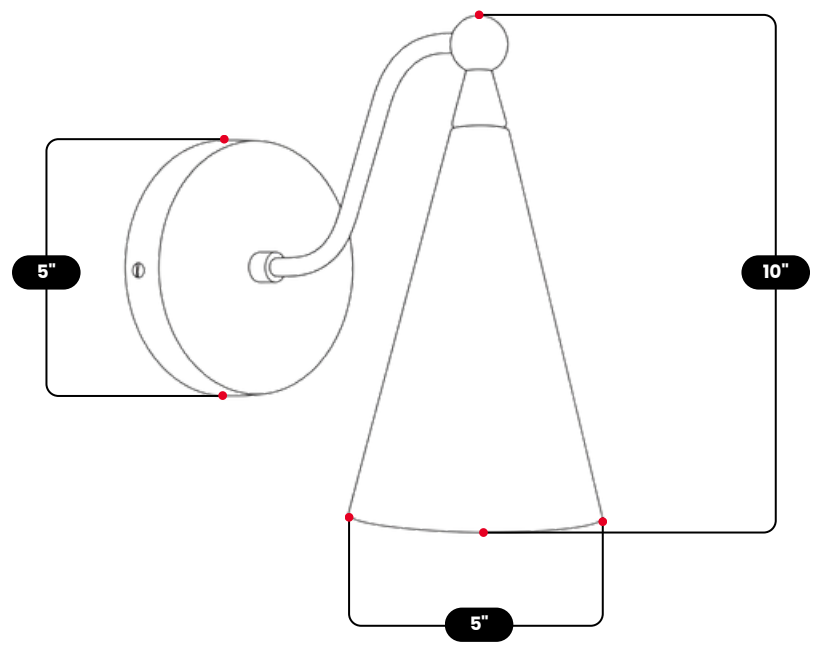

MATERIAL	Pure Brass
FINISH SHOWN	Antique Brass
HEIGHT	10"(25.4cm)
WIDTH	5”(12.7cm)
DEPTH	12”(30.48cm)
BULB TYPE	E12(US) / E14 (EU)
VOLTAGE	110-120V / 220-230V
MAX WATTAGE	50W (LED / Halogen)
DIMMABLE	With Dimmable Bulbs
BULB INCLUDED	No
IP RATING	IP20
LIGHT DIRECTION	Downlight
MOUNTING	Hardwired
MOUNT TYPE	Wall Mounted

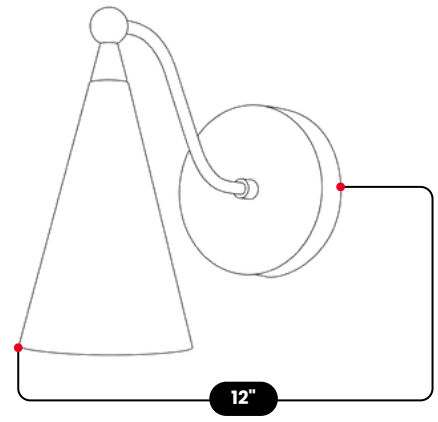

AVAILABLE FINISHES
Polished Brass
Antique Brass
Brushed Brass
Raw Brass
Polished Chrome
Brushed Chrome
Matt Black

Product Notes :

1) Bulbs are not included. 2) Each LightCove fixture is handcrafted, making every piece unique. 3) Custom finishes and sizes available upon request. 4) All items are made to order, standard production time applies. 5) Visit LightCove product care and warranty information

LightCove

Handcrafted Brass Lighting

info@lightcove.store