LightCove

CURVED WALL LAMP BRASS SCONCE

Raw Brass



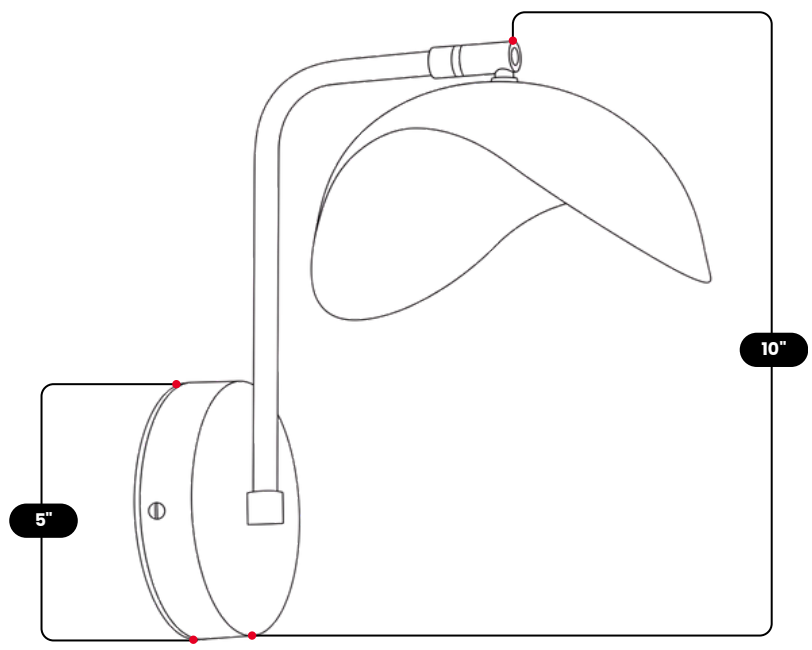

MATERIAL	Pure Brass
FINISH SHOWN	Raw Brass
HEIGHT	10"(25.4cm)
WIDTH	11.5”(29.21cm)
DEPTH	9”(22.86cm)
BULB TYPE	E12(US) / E14 (EU)
VOLTAGE	110-120V / 220-230V
MAX WATTAGE	50W (LED / Halogen)
DIMMABLE	With Dimmable Bulbs
BULB INCLUDED	No
IP RATING	IP20
LIGHT DIRECTION	Downlight
MOUNTING	Hardwired
MOUNT TYPE	Wall Mounted

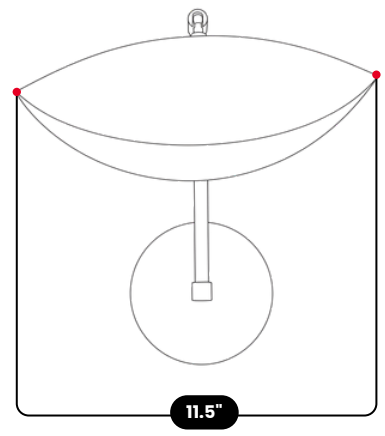

AVAILABLE FINISHES	
Polished Brass	
Antique Brass	
Brushed Brass	
Raw Brass	
Polished Chrome	
Brushed Chrome	
Matt Black	

Product Notes :

1) Bulbs are not included. 2) Each LightCove fixture is handcrafted, making every piece unique. 3) Custom finishes and sizes available upon request. 4) All items are made to order, standard production time applies. 5) Visit LightCove product care and warranty information

LightCove

Handcrafted Brass Lighting

info@lightcove.store