LightCove

DOUBLE BRASS CONE SHADE FLUSH MOUNT

Antique Brass



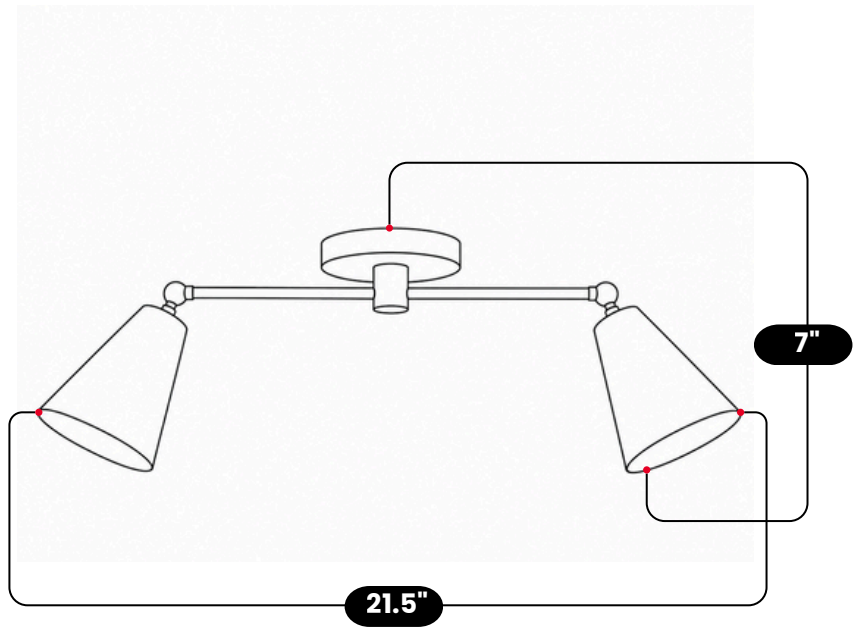

MATERIAL	Pure Brass
FINISH SHOWN	Antique Brass
HEIGHT	7”(17.78cm)
WIDTH	21.5”(54.61cm)
DEPTH	5”(12.7cm)
BULB TYPE	E12(US) / E14(EU)
VOLTAGE	110-120V / 220-230V
MAX WATTAGE	50W (LED / Halogen)
DIMMABLE	With Dimmable Bulbs
BULB INCLUDED	No
IP RATING	IP20
LIGHT DIRECTION	Downward
MOUNTING	Hardwired
MOUNT TYPE	Flush Mounted

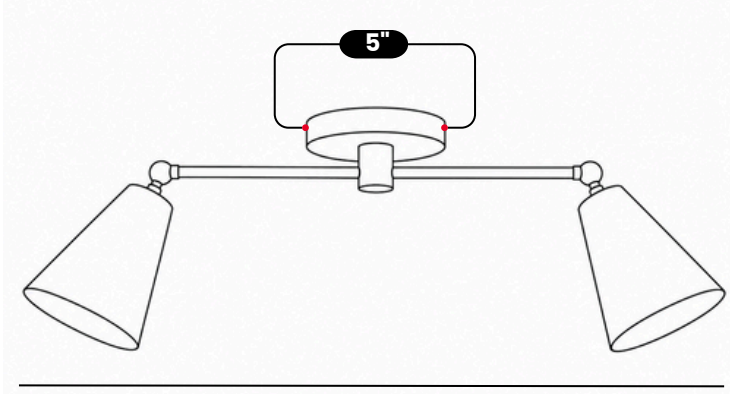

Available Finishes :

- Polished Brass
- Brushed Brass
- Brushed Chrome
- Polished Chrome
- Matt Black
- Antique Black
- Antique Brass
- Raw Brass
- Blackened Brass

Product Notes :

1) Bulbs are not included. 2) Each LightCove fixture is handcrafted, making every piece unique. 3) Custom finishes and sizes available upon request. 4) All items are made to order, standard production time applies. 5) Visit LightCove product care and warranty information

LightCove
Handcrafted Brass Lighting
info@lightcove.store