LightCove

LARGE PERFORATED BRASS DOME CHANDELIER

Raw Brass



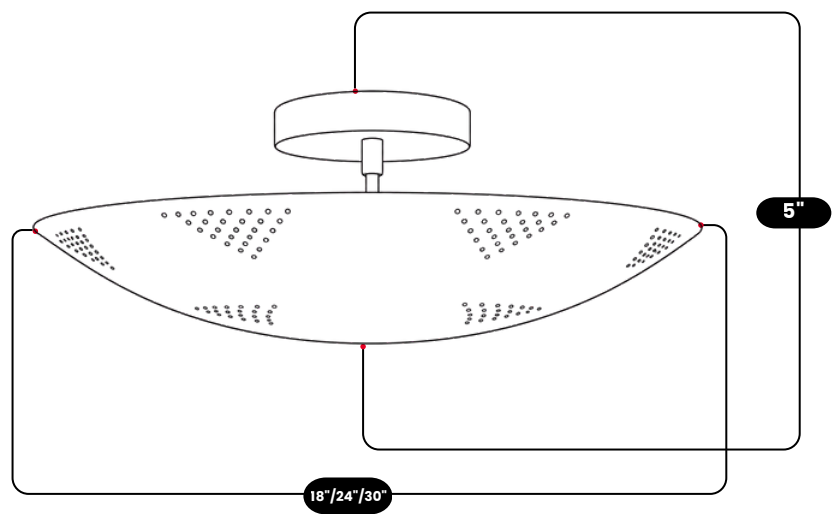

MATERIAL	Pure Brass
FINISH SHOWN	Antique Brass
HEIGHT	15"(38.1cm)
WIDTH	18"/24"/30'(45.72cm/60.96cm/76.2cm)
BACKPLATE DIAMETER	5"(12.7cm)
BULB TYPE	E12(US) / E14
VOLTAGE	110-120V / 220-230V
MAX WATTAGE	50W (LED / Halogen)
DIMMABLE	With Dimmable Bulbs
BULB INCLUDED	No
IP RATING	IP20
LIGHT DIRECTION	Downward
MOUNTING	Hardwired
MOUNT TYPE	Flush Mounted

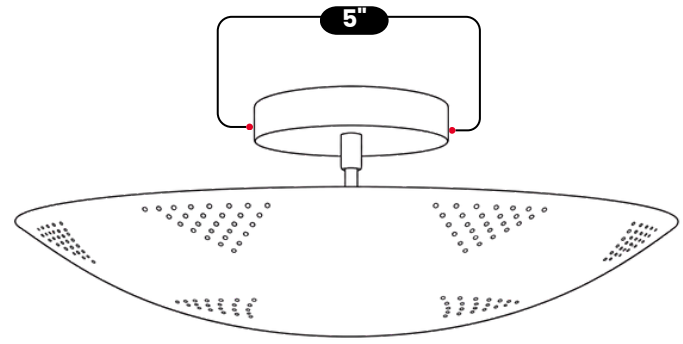

AVAILABLE FINISHES	
Polished Brass	
Antique Brass	
Brushed Brass	
Raw Brass	
Polished Chrome	
Brushed Chrome	
Matt Black	

Product Notes :

1) Bulbs are not included. 2) Each LightCove fixture is handcrafted, making every piece unique. 3) Custom finishes and sizes available upon request. 4) All items are made to order, standard production time applies. 5) Visit LightCove product care and warranty information

LightCove

Handcrafted Brass Lighting

info@lightcove.store